TFT MODULE SPECIFICATION

RVT4.3A480272CFWN36 V4

4.3" LCD TFT DATASHEET
Rev. 1.0
2026-11-18

Riverdi Sp. z o.o.

Nowy Swiat 36
80-299 Gdansk, Poland
VAT ID: PL5842767153
Registration number (KRS): 0000923967

+48 587 703 116

Office hours: 9:00 to 17:30 CET (Mon-Fri)

contact@riverdi.com

riverdi.com

ITEM	CONTENTS	UNIT
Display Type	TFT/Transmissive/Normally white	/
Size	4.3	Inch
Viewing Direction	12:00 (without image inversion)	O' Clock
Gray Scale Inversion Direction	6:00	O' Clock
Outside Dimensions (W x H x D)	106.30 x 83.98 x 7.61	mm
Active Area (W x H)	95.04 x 53.86	mm
Pixel Pitch (W x H)	0.198 x 0.198	mm
Resolution	480 (RGB) x 272	/
Surface Luminance	550	cd/m^2
Interface Type	Parallel 8/16b (i80 by default)	/
Color Depth	16.7M	/
Backlight Type	10 LEDs	/
Pixel Arrangement	RGB Vertical Stripe	/
Controller IC	SSD1963QL9	/
With/Without Touch	Without Touch Panel	/
LCD Input Voltage	3.3	V
Weight	TBD	g

Note 1. RoHS compliant

Note 2. LCM weight tolerance: ± 5%.

1. REVISION RECORD

REV NO.	REV DATE	CONTENTS	REMARKS
1.0	2026-11-18	Initial Release, PCN: RVD002-107	

2. CONTENTS

1. REVISION RECORD 3
2. CONTENTS 4
3. MODULE CLASSIFICATION INFORMATION 5
4. ASSEMBLY GUIDE 6
   4.1 Mounting frame 6
5. MODULE DRAWING 7
6. ABSOLUTE MAXIMUM RATINGS 8
7. ELECTRICAL CHARACTERISTICS 8
8. ELECTRO-OPTICAL CHARACTERISTICS 9
9. INTERFACES DESCRIPTION 12
10. INTERFACE TIMING CHARACTERISTICS 13
    10.1 8080 Mode 13
    10.2 Parallel 8080-series Interface Timing 13
11. TIMING CHARACTERISTICS 14
    11.1 Timing table 14
    11.2 SYNC Mode Timing Diagram 15
    11.3 SYNC-DE Mode Timing Diagram 15
    11.4 DE Mode Timing Diagram 16
12. INSPECTION 16
13. RELIABILITY TEST 17
14. LEGAL INFORMATION 18
15. CONTACT 19

3. MODULE CLASSIFICATION INFORMATION

RV	T	4.3	A	480272	C	F	W	N	36	V4
1.	2.	3.	4.	5.	6.	7.	8.	9.	10.	11.

NO.	PARAMETER	SYMBOL
1.	BRAND	RV – Riverdi
2.	PRODUCT TYPE	T – TFT Standard
3.	DISPLAY SIZE	4.3 – 4.3”
4.	MODEL SERIAL NO.	A (A-Z)
5.	RESOLUTION	480272 – 480x272 px
6.	INTERFACE	C – TFT + Controller
7.	FRAME	F – With Mounting Metal Frame
8.	BACKLIGHT TYPE	W – LED White
9.	TOUCH PANEL	N – Without Touch Panel
10.	VERSION	36 (00-99)
11.	MODULE REVISION	V4

4. ASSEMBLY GUIDE

4.1 Mounting frame

For dimensions 3.5”, 4.3” and 7.0” the product with mounting frame version is available. Thanks to the four catches attached to the side, frame provides strong assembly to the surface by mounting element (like the screw, see Figure 1). The frames are specially designed to fit Riverdi products perfectly. The diameter of the mounting hole is 3.5mm.

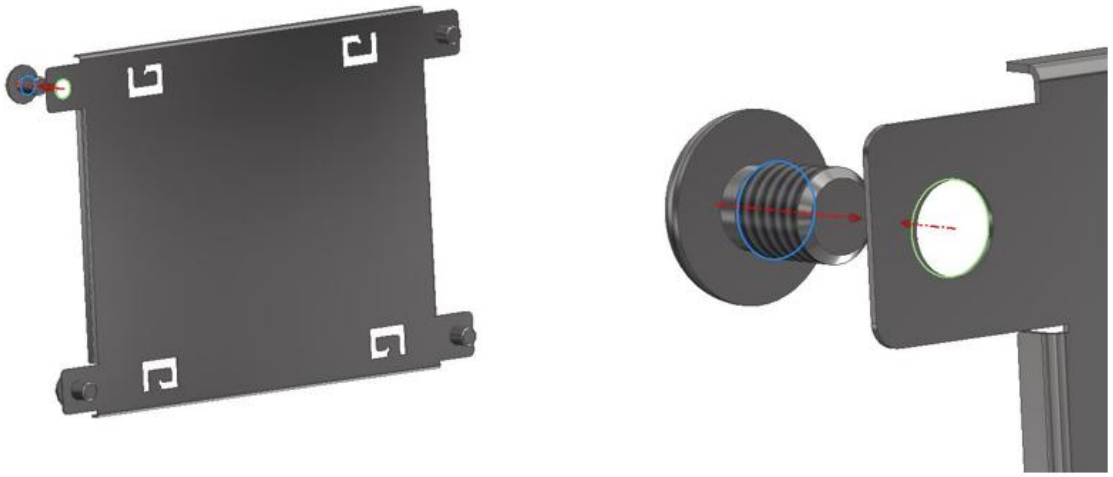

Figure 1. Mounting Frame

Revision:	Changes:	Date:
1.0	Initial Case, PCN: RVD002-107	2026.11.18

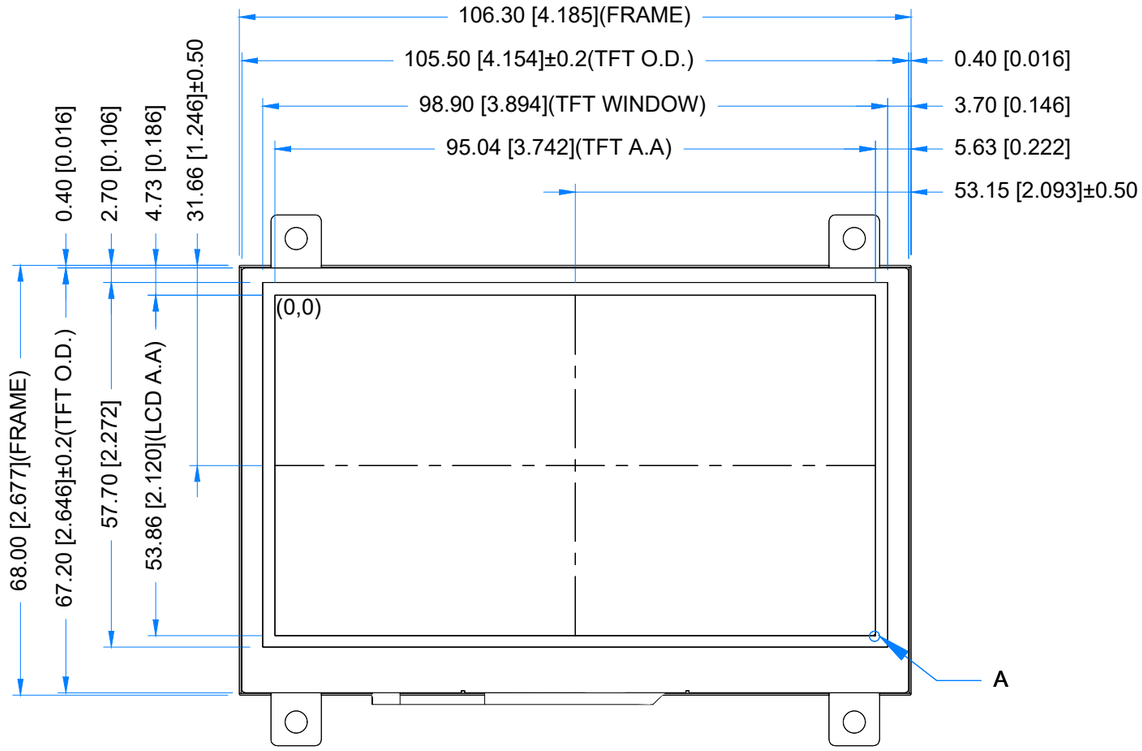

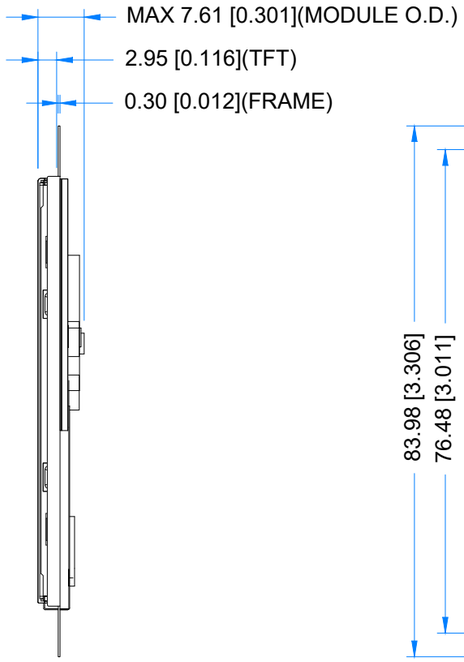

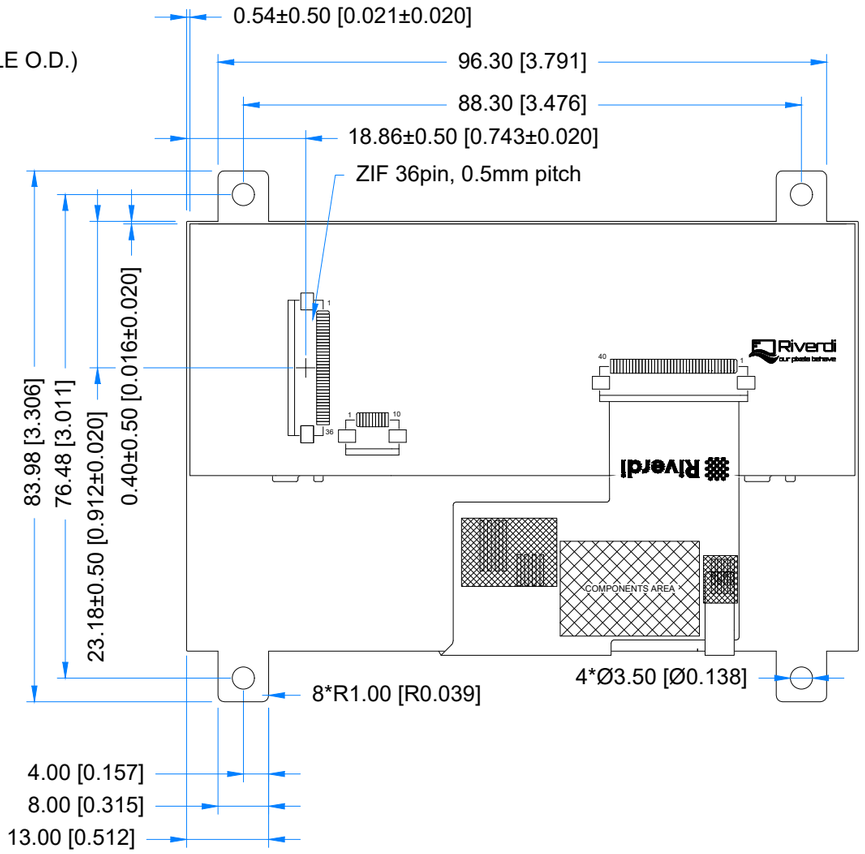

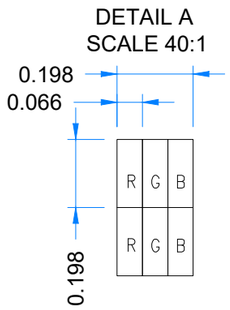

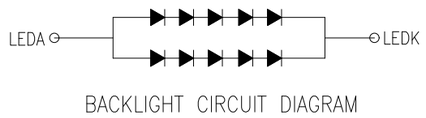

BACKLIGHT CIRCUIT DIAGRAM

TFT NOTES:
1. DISPLAY TYPE: TFT, TRANSMISSIVE, NORMALLY WHITE
2. RESOLUTION: 480 x 272
3. VIEWING ANGLE: 12 O'CLOCK
4. CONTROLLER IC: SSD1963QL9
5. OPERATION VOLTAGE: VDD=3,3V (TYP.)

GENERAL NOTES:
1. SURFACE LUMINANCE: 550cd/m^2
2. OPERATING TEMPERATURE: -20°C ~ 70°C
3. STORAGE TEMPERATURE: -30°C ~ 80°C
4. WITHOUT INDIVIDUAL TOLERANCE: ±0.3mm
5. RoHS COMPLIANT

PN: RVT4.3A480272CFWN36 V4				
SN:				
DRAWN:	M.Stabinski	2026.11.18	1:0.97	
CHECKED:	M.Wierzbowski	2026.11.18	[mm]	
APPR:	M.Wierzbowski	2026.11.18	ISO A3	P. 1 of 1

6. ABSOLUTE MAXIMUM RATINGS

PARAMETER	SYMBOL	MIN	MAX	UNIT
Power Supply Voltage	VDD	-0.3	4.6	V
Input Voltage for Logic	VIN	-0.3	VDD	V
Input Voltage for LED Inverter	BLVDD	-0.3	7.0	V
Operating Temperature	T_{OP}	-20	70	°C
Storage Temperature	T_{ST}	-30	80	°C

Note. The above are maximum values. If exceeded, they may cause permanent damage to the unit.

7. ELECTRICAL CHARACTERISTICS

PARAMETER	SYMBOL	MIN	TYP	MAX	UNIT
Supply Voltage for Module	VDD	3.0	3.3	3.6	V
Input Voltage for LED Inverter	BLVDD	2.8	3.3	5.5	V
Input Voltage ‘H’ level for BL_E pin	BL_E_H	1.5	-	5.5	V
Input Voltage ‘L’ level for BL_E pin	BL_E_L	0	-	0.7	
Input Current (Exclude LED Backlight)	IDD	-	25	32	mA
LED Backlight Current	$IDD_{backlight}$		265	332	mA
LED Backlight Current	$IDD_{backlight}$		156	195	mA
Total Input Current (Include LED Backlight 100%)	IDD_{total}	-	290	363	mA
Input Voltage ' H ' level	V_{IH}	0.7VDD	-	VDD	V
Input Voltage ' L ' level	V_{IL}	0	-	0.2VDD	V
Backlight lifetime	-	30,000	50,000	-	hours

8. ELECTRO-OPTICAL CHARACTERISTICS

ITEM	SYMBOL	CONDITION	MIN	TYP	MAX	UNIT	RMK	NOTE
Response Time	Tr+Tf	θ=0° ø=0° Ta=25 °C	-	25	50	ms	FIG 2.	4, 7
Contrast Ratio	Cr		400	500	-	---	FIG 3.	1, 7
Surface Luminance	Lv		-	550	-	cd/m2		2, 7
Luminance Uniformity	δ WHITE		80	-	-	%		3
Viewing Angle Range	θ	ø = 90°	40	50	-	deg	FIG 4.	6
		ø = 270°	60	70	-	deg		
		ø = 0°	60	70	-	deg		
		ø = 180°	60	70	-	deg		
CIE (x, y) Chromaticity	Rx	θ=0° ø=0° Ta=25 °C	0.546	0.596	0.646	-	FIG 3.	5,7
	Ry		0.312	0.362	0.412	-		
	Gx		0.277	0.327	0.377	-		
	Gy		0.524	0.574	0.624	-		
	Bx		0.097	0.147	0.197	-		
	By		0.016	0.066	0.116	-		
	Wx		0.236	0.286	0.336	-		
	Wy		0.256	0.306	0.356	-		
NTSC ratio	-	-		55.2	-	%		

Note 1. Contrast Ratio (CR) is defined mathematically as below, for more information see Figure 2.

$$\text{Contrast Ratio} = \frac{\text{Average Surface Luminance with all white pixels (P1, P2, P3, P4, P5)}}{\text{Average Surface Luminance with all black pixels (P1, P2, P3, P4, P5)}}$$

Note 2. Surface luminance is the LCD surface from the surface with all pixels displaying white. For more information see Figure 3.

Lv = Average Surface Luminance with all white pixels (P1, P2, P3, P4, P5)

Note 3. The uniformity in surface luminance δ WHITE is determined by measuring luminance at each test position 1 through 5, and then dividing the minimum luminance of 5 points luminance by maximum luminance of 5 points luminance. For more information see Figure 3.

$$\delta \text{ WHITE } = \frac{\text{Minimum Surface Luminance with all white pixels (P1, P2, P3, P4, P5)}}{\text{Maximum Surface Luminance with all white pixels (P1, P2, P3, P4, P5)}}$$

Note 4. Response time is the time required for the display to transition from white to black (Rise Time, Tr) and from black to white (Decay Time, Tf). For additional information see Figure 2. The test equipment is BM-7A.

Note 5. CIE (x, y) chromaticity, the x, y value is determined by measuring luminance at each test position 1 through 5, and then make average value.

Note 6. For TFT module, viewing angle is the angle at which the contrast ratio is greater 10. The angles are determined for the horizontal or x axis and the vertical or y axis with respect to the z axis which is normal to LCD surface. For more information see Figure 4.

Note 7. Viewing angle is measured at the center point of the LCD by CONOSCOPE (ergo-80). For response time testing, the testing data is based on BM-7A. Instruments for Contrast Ratio, Surface Luminance, Luminance Uniformity, Chromaticity the test data is based on SR-3A.

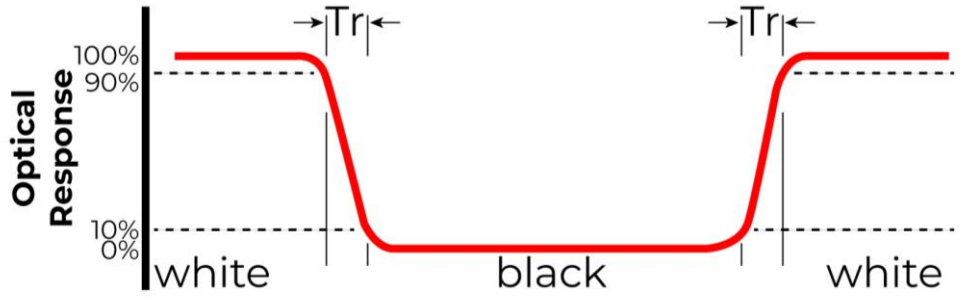

Figure 2. The definition of response time

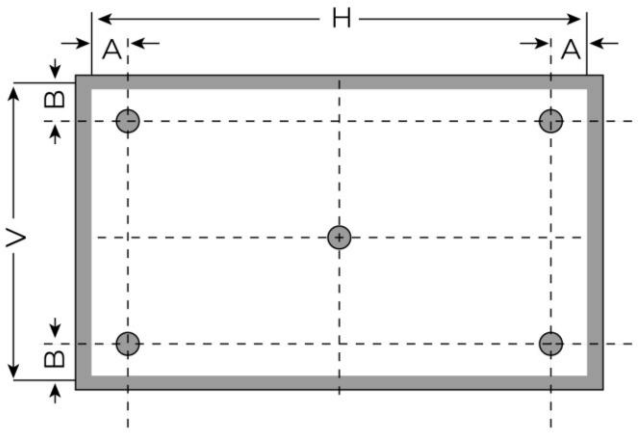

A: 5mm

B: 5mm

H, V: Active Area

Light spot size ∅=5mm, 500mm distance from the LCD surface to detector lens.

Measurement instrument is SR-3A

Figure 3. Measuring method for Contrast ratio, surface luminance, Luminance uniformity, CIE (x, y) chromaticity

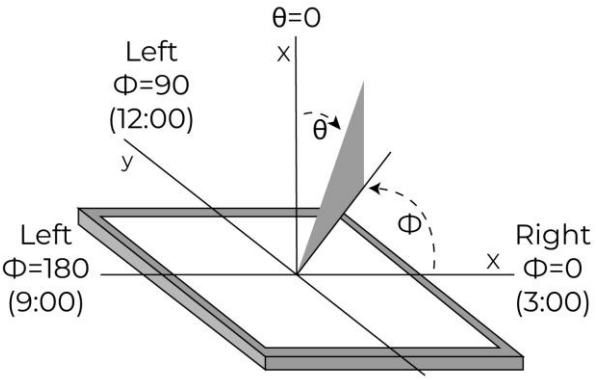

Figure 4. The definition of viewing angle

9. INTERFACES DESCRIPTION

PIN	SYMBOL	I/O/P	DESCRIPTION
1	GND	P	Power Ground
2	VDD	P	Power Supply: +3.3V
3	BL_E	I	Backlight Control Signal, H: On/L: Off (internally pulled-up to BLVDD)
4	D/C	I	Data/Command Select
5	WR	I	Write Strobe Signal
6	RD	I	Read Strobe Signal
7-22	D0-D15	I	Data Bus. Pins not used should be floating.
23	NC	-	No Connection
24	TP_INT	O	Touch panel interrupt output
25	CS	I	Chip Select
26	RESET	I	Hardware reset
27	DISP ON	I	Display Control H: On/L: Off (internally pulled-up)
28	NC	-	No Connection
29	TP_SCL	I	Touch panel I2C clock
30	TP_SDA	I/O	Touch panel I2C data
31	TP_RST	I	Touch panel reset
32	NC	-	No Connection
33	BLED-	P	Backlight ground, can be connected to GND
34	VLED-	P	Backlight ground, can be connected to GND
35	VLED+	P	Backlight power supply, can be connected to VDD
36	VLED+	P	Backlight power supply, can be connected to VDD

I/O/P definition: I----Input O----Output P----Power/Ground

10. INTERFACE TIMING CHARACTERISTICS

10.1 8080 Mode

The 8080 mode MCU interface consist of CS#, D/C#, RD#, WR#, D[15:0]. This interface use WR# to define a write cycle and RD# for read cycle. If the WR# goes low when the CS# signal is low, the data or command will be latched into the system at the rising edge of WR#. Similarly, the read cycle will start when RD# goes low and end at the rising edge of RD#.

10.2 Parallel 8080-series Interface Timing

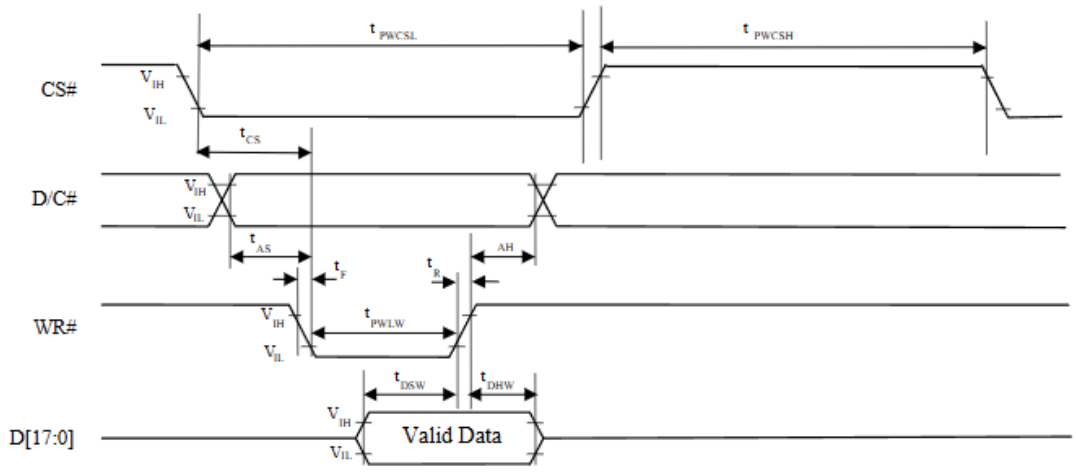

Figure 5. Parallel 8080-series Interface Timing Diagram (Write Cycle)

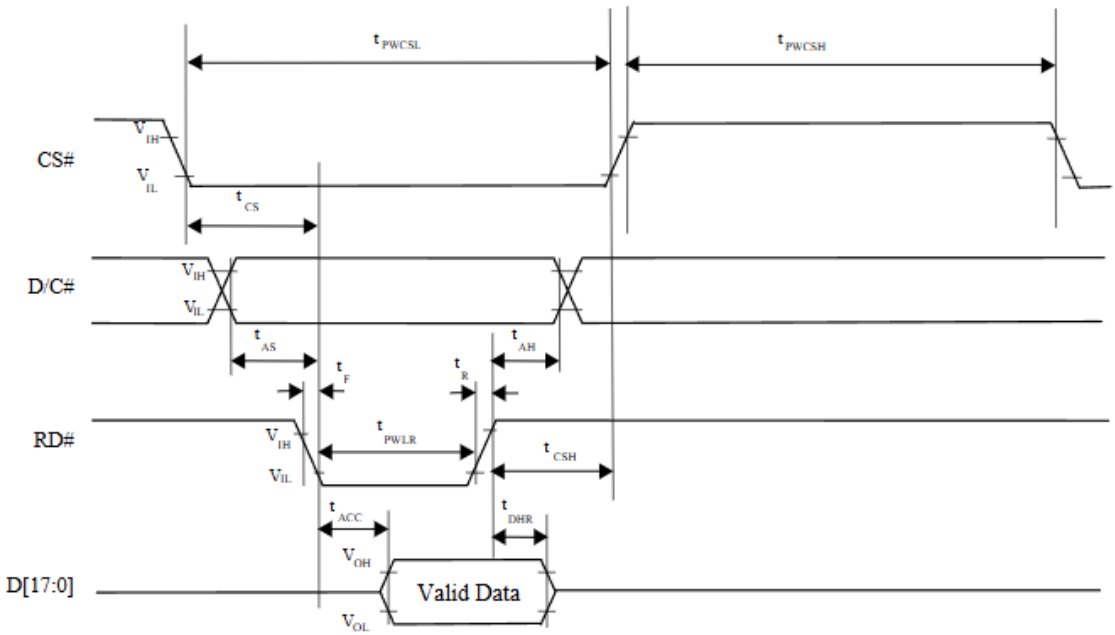

Figure 6. Parallel 8080-series Interface Timing Diagram (Read Cycle)

11. TIMING CHARACTERISTICS

11.1 Timing table

PARAMETER		SYMBOL	MIN	TYP	MAX	UNIT
DCLK frequency		Fclk	8	9	12	MHz
DCLK Period		Tclk	83	111	125	ns
HSYNC	Period Time	Th	485	531	598	DCLK
	Display Period	Thdisp		480		
	H_{sync} Back Porch	Thbp	3	43	43	
	H_{sync} Front Porch	Thfp	2	8	75	
	H_{sync} Pulse Width	Thw	2	4	75	
VSYNC	Period Time	Tv	276	292	321	HSYNC
	Display Period	Tvdisp		272		
	V_{sync} Back Porch	Tvbp	2	12	12	
	V_{sync} Front Porch	Tvfp	2	8	37	
	V_{sync} Pulse Width	Tvw	2	4	37	

11.2 SYNC Mode Timing Diagram

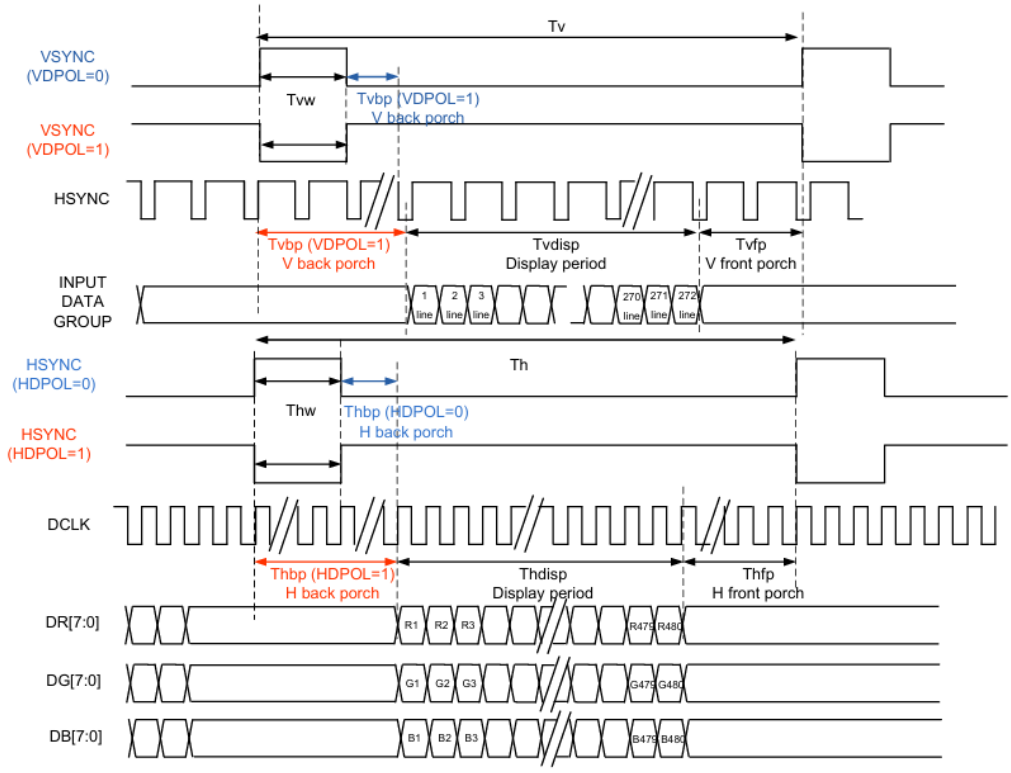

11.3 SYNC-DE Mode Timing Diagram

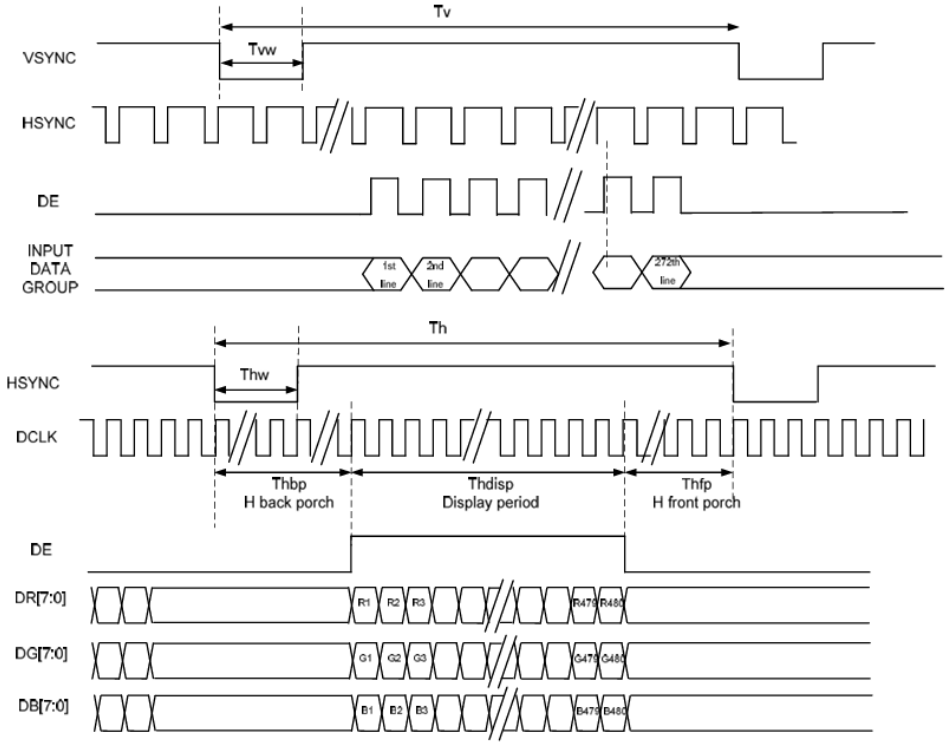

11.4 DE Mode Timing Diagram

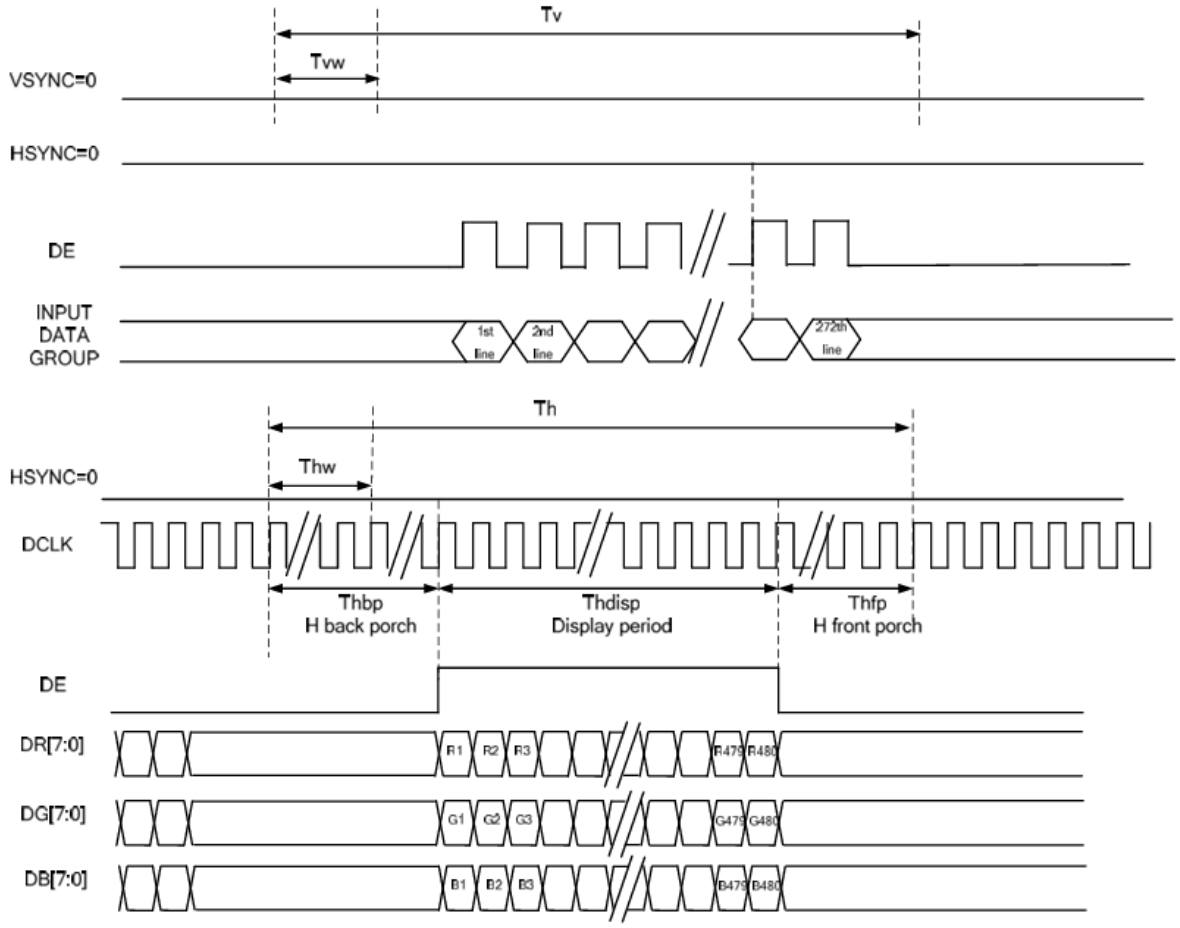

12. INSPECTION

Standard acceptance/rejection criteria for TFT module according to document available here.

13. RELIABILITY TEST

NO.	TEST ITEM	TEST CONDITION	NOTE
1	High Temperature Storage	80℃ ± 2℃ / 240Hrs.	IEC60068-2-2 GB2423.2
2	Low Temperature Storage	-30℃ ± 2℃ / 240Hrs.	IEC60068-2-1 GB2423.1
3	High Temperature Operating	70℃ ± 2℃ / 240Hrs.	IEC60068-2-2 GB2423.2
4	Low Temperature Operating	-20℃ ± 2℃ / 240Hrs.	IEC60068-2-1 GB2423.1
5	High Temperature and High Humidity Operation Test	60 ± 5℃, 90%RH 240Hrs.	IEC60068-2-3 GB/T2423.3
6	Thermal Shock Test (Non-operating)	-20±2℃(30Min.)~25±2℃(5Min.)~60±2℃(30Min.) 10Cycles	IEC60068-2-14 GB2423.22
7	Vibration Test (Non-operating)	Frequency: 10~55Hz Amplitude: 1.5mm Sweep Time: 11Mins Test Period: 6 Cycles For Each Direction of X, Y, Z (Packing Condition)	IEC60068-2-6 GB2423.10
8	Electro Static Discharge Test	R: 330Ω, C:150pF, 5points/panel Air: ±8KV, 10times; Contact: ±4KV, 10times; (Environment: 15℃~35℃, 30%~60%, 86Kpa~106Kpa)	IEC61000-4-2 GB/T17626.2

Note 1: Without water condensation.

Note 2: The function test shall be conducted after 2 hours storage at the room temperature (25℃±2℃) and room humidity (65%±5%) after removed from the test chamber. In the standard conditions, there shall be no functional defects occurred.

14. LEGAL INFORMATION

CE marking is usually obligatory only for a complete end product. Riverdi display modules are semi-finished goods which are used as inputs to become part of the finished products.

Therefore, Riverdi display modules are not CE marked.

This is not a standalone product. It was designed as an electronic component. It needs integration with a whole system to be fully functional.

Riverdi grants the guarantee for the proper operation of the goods for a period of 12 months from the date of possession of the goods. If in a consequence of this guaranteed execution the customer has received the defects-free item as replacement for the defective item, the effectiveness period of this guarantee shall start anew from the moment the customer receives the defects-free item.

Information about device is the property of Riverdi and may be the subject of patents pending or granted. It is not allowed to copy or disclosed this document without prior written permission.

Riverdi endeavors to ensure that all contained information in this document is correct but does not accept liability for any error or omission. Riverdi products are in developing process and published information may be not up to date. Riverdi reserves the right to update and makes changes to Specifications or written material without prior notice at any time. It is important to check the current position with Riverdi.

Images and graphics used in this document are only for illustrative the purpose. All images and graphics are possible to be displayed on the range products of Riverdi, however the quality may vary. Riverdi is no liable to the buyer or to any third party for any indirect, incidental, special, consequential, punitive, or exemplary damages (including without limitation lost profits, lost savings, or loss of business opportunity) relating to any product, service provided or to be provided by Riverdi, or the use or inability to use the same, even if Riverdi has been advised of the possibility of such damages.

Riverdi products are not fault tolerant nor designed, manufactured or intended for use or resale as on line control equipment in hazardous environments requiring fail–safe performance, such as in the operation of nuclear facilities, aircraft navigation or communication systems, air traffic control, direct life support machines or weapons systems in which the failure of the product could lead directly to death, personal injury or severe physical or environmental damage (‘High-Risk Activities’). Riverdi and its suppliers specifically disclaim any expressed or implied warranty of fitness for High-Risk Activities. Using Riverdi products and devices in 'High-Risk Activities' and in any other application is entirely at the buyer’s risk, and the buyer agrees to defend, indemnify and hold harmless Riverdi from all damages, claims or expenses resulting from such use. No licenses are conveyed, implicitly or otherwise, under any Riverdi intellectual property rights.

15. CONTACT

Your Success is Our Priority

Stuck on a technical challenge? Need expert guidance?
Our dedicated support team is just a message away.

Contact us at
contact@riverdi.com

We're here to ensure your project's success, every step of the way!